What is the interactive mode

Operating the fire alarm system in an interactive mode means that no matter when you arrive at the site, you will always be aware of any event and will be able to quickly eliminate its cause.

How a ordinary two-wire detector connects and works with FACU you can most likely imagine. Smoke two-wire detectors are connected to AL so that the plus contact based on the detector is directly common to the incoming and outgoing plus wire of the loop. In turn, the two minus contacts on the base do not have a connection to each other, but are only closed by means of a built-in detector jumpers. Therefore, when the detector is installed in the base, the loop circuit is closed and FACU signals that the given AL is in the "Normal Operation" state.

If we set between the two minus contacts of the detector not a jumper, but an electronic key (relay) controlled by the program, we will get at least the same detector that closes the loop circuit when it is installed in the base, because its program gives the command to close this key. But with this key it is possible to break the loop circuit for a few seconds using the program so that FACU has time to record this break in its event log and the performance of the entire fire alarm system has not been disrupted.

By means of this controlled short circuit break, the detector "DOKA-c" reports its transition to the "Dust" or "Fault" state. Thus, the loop is broken for 4 seconds at most once a day, and the light indication corresponding to a specific condition, "DOKA-c" is kept constant until the causes of the "Dust" or "Fault" signals are removed.

If "DOKA-c" has completely lost its operability, the key (relay "Fault") will be permanently opened.

A situation may arise when FACU has recorded AL break in its event log, and there is no detector in the loop with the "Dust" or "Fault" light indication, but there is a detector with the "Event in Memory" indication. This may indicate the following.

A) If "DOKA-c" has diagnosed dusting of the sensing chamber, but the dust level is close to the "clean sensing chamber" limit, the next analysis may shift the level to the "clean sensing chamber" area and the detector will go into the "Event in Memory" state. This state is completely identical to the "Standby Mode" state, but differs only in indication. In this way, you can send this detector to the manufacturer for diagnostics or leave it in the loop until you find the "Dust" light indication.

B) If "DOKA-c" has diagnosed a fault, but has not detected it during subsequent self-diagnosis, the detector will switch to the "Event in Memory" state. The code of the fault diagnosed will be recorded in memory. In this way, the detector can be transferred to the manufacturer for diagnostics or left in the loop until you find the light indication "Fault".

In addition, there are cases where the detector is triggered by smoke, or a factor similar in physical properties to smoke (dust, steam, etc.) and FACU resets this trigger. To find out which detector in a particular alarm loop was in the "Fire" state, all you need to do is to check the light indication of all "DOKA-c" in the given AL and find a detector in the "Event in Memory" state. If you are sure that this triggering was caused by a real fire factor (or similar), you should clear the memory of the detector.

In this way **you save your time and money by improving quality and reliability:**

- there is no need to check every detector, as the system is in full control of itself;
- there is no need to spend a lot of time looking for a faulty or triggered detector, as "DOKA-c" always remembers and displays its states;
- "DOKA-c" which has diagnosed dust or a fault will unobtrusively report this to FACU no more than once a day.

Example of how the interactive mode works

1. All "DOKA-c" detectors in the loop are in the "Standby Mode" state and the state of the loop for the FACU is in "Normal Operation".

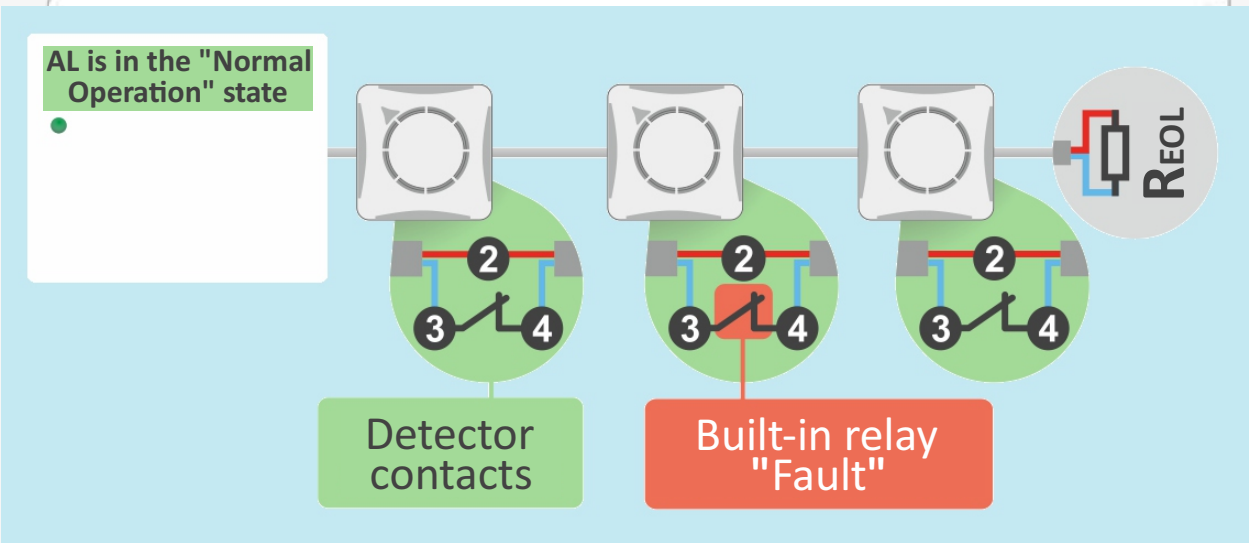

2. One of "DOKA-c" detectors diagnosed the dusting of the sensing chamber and switched to the "Dust" state, and the state of the loop for FACU was changed to the "Fault/AL Break", but only for 4 seconds and then returned to the "Normal operation" state.

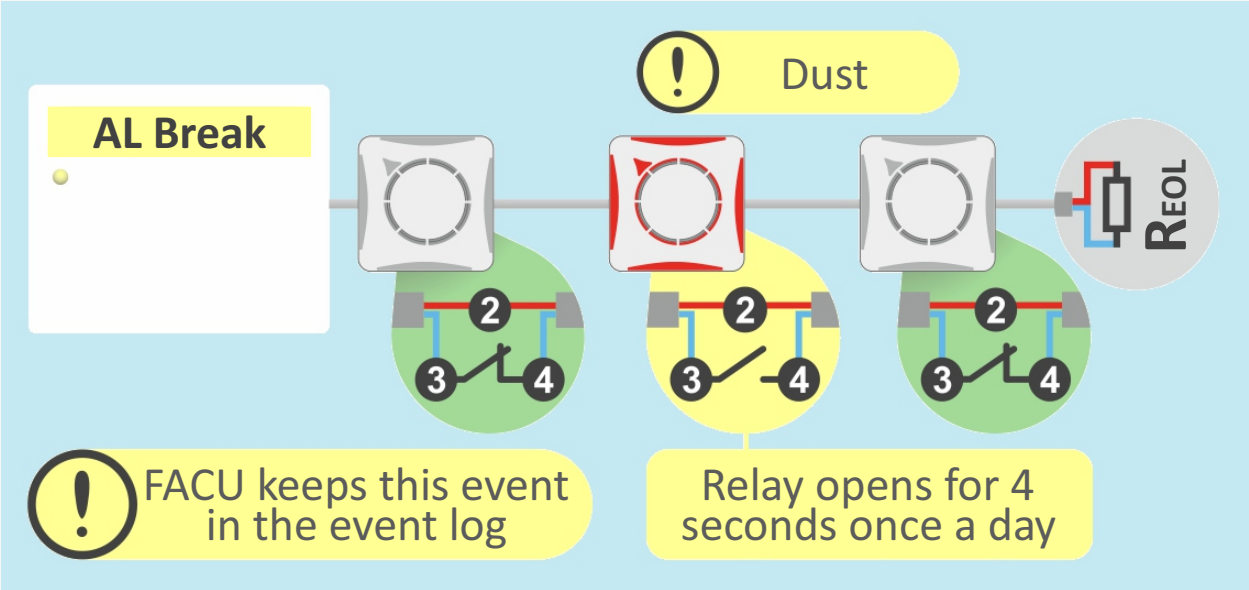

3. Find out from the event log on FACU which loop was in the "Fault" state for about 4 seconds, check the light indication of all "DOKA-c" in this loop, replace the detector and leave the site.

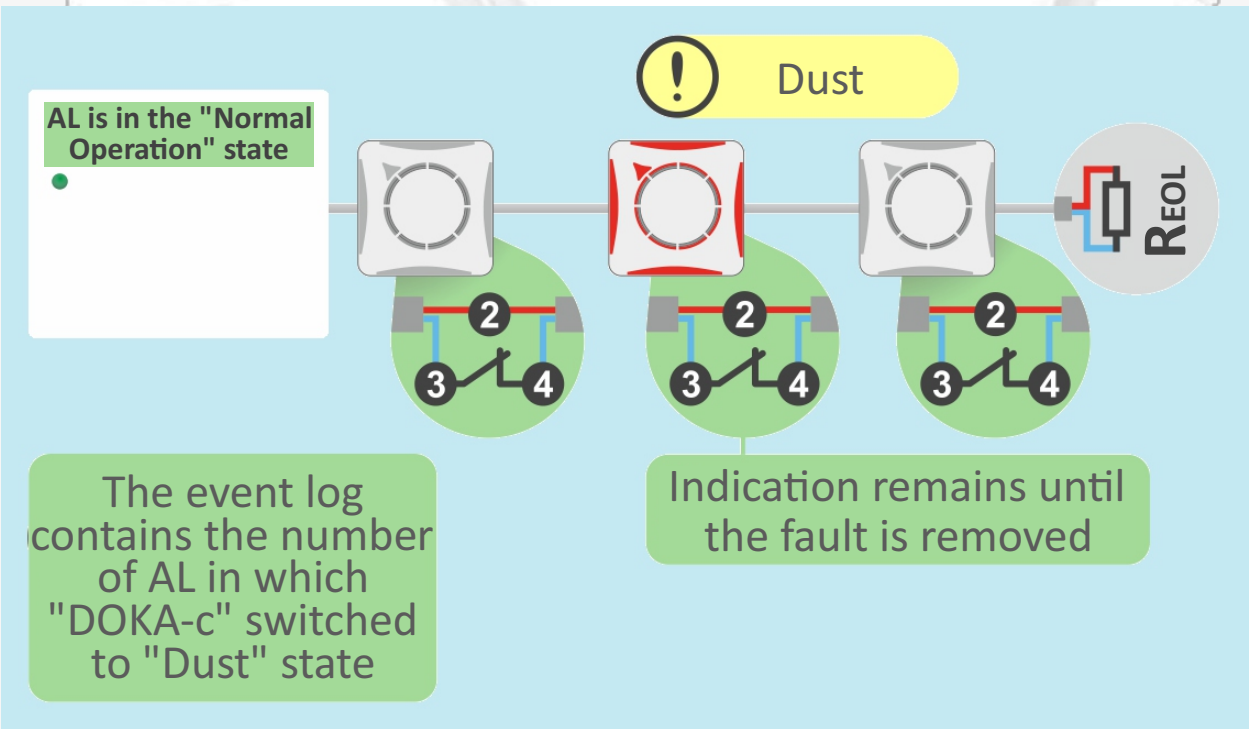

Brief information on system state and their values

DOKA-c			FACU
State	**Light indicator**	**Contacts "3" - "4"**	**AL state**
Standby	1 flash every 8 sec.	Closed	**Normal**
Fire	Is on all the time	Closed	**Attention / Fire**
Fault	2 flashes every 4 sec.	Open for 4 sec., no more than 1 time per day	**Fault** appears for 4 sec., no more than 1 time per day
Dust	3 flashes every 4 sec.		
Event in Memory	1 flash every 4 sec.	Closed	**Normal**
Total loss of operability	No indication	Open	**Fault**

Attention!	*Interactive mode is activated by removing jumper "3" and is possible when correctly connected to FACU according to the instructions on the **DOKAsensors.by** website.* *If the jumper "3" is installed, it shortens "Fault" relay and "DOKA-c" works with FACU as an ordinary detector.*

TECHNICAL SUPPORT
Mobile, Viber, WhatsApp, Telegram: +375295509079
Mail: zsa.kto@gmail.com
Web: dokasensors.by